# Data Sheet

Article number: 2310310945
Description: E+G Levelling element w/no-slip disc
LV.A-125-ACV-AS-M30x186

## Measures

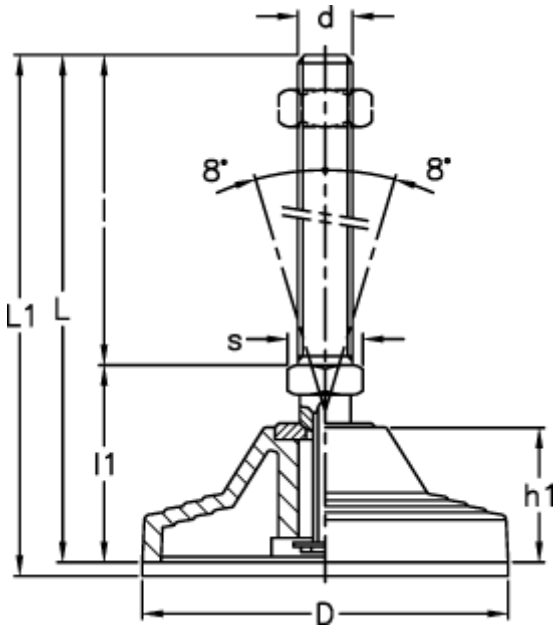


| | | |
|---|---|---|
| D | = 125 | s = 30 |
| d | = M30 | |
| h | = 45 | |
| l | = 186 | |
| L | = 250 | |
| l1 | = 64 | |
| L1 | = 260 | |
| Max load (N) | = 40000 | |

*Product drawings and brochures of any kind may contain errors for which Brd. Klee A/S cannot be liable.*